PAULY

Fotoelektrik Pauly GmbH & Co. KG, Wahrbrink 6, D-59368 Werne, Telefon 02389/40227-70, Telefax 02389/40227-77, www.pauly-lichtschranken.de

Transmitter-Receiver Light Barrier Type PP2004(P)

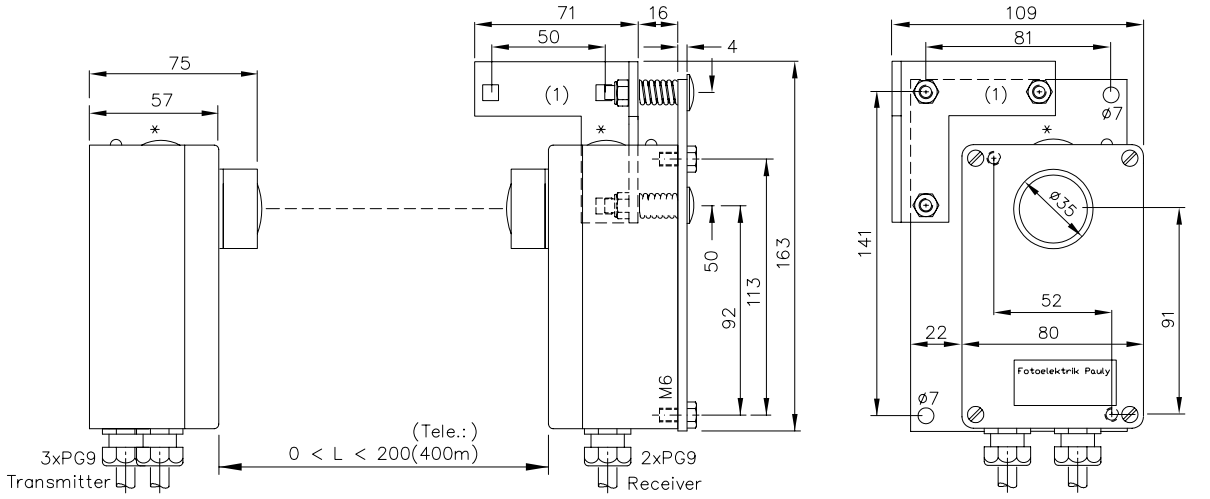

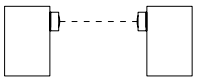

0-200(400m)

Transmitter-Receiver Light Barrier

PP 2004(P)

Order-No.:

1623

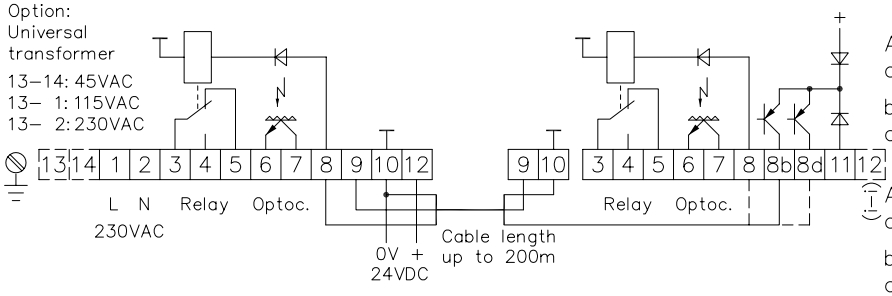

Activation of relay and optocoupler in transmitter

brightswitch.: 8b(R) → 8(T)
darkswitching: 8d(R) → 8(T)

Activation of relay and optocoupler in receiver

brightswitch.: 8b(R) → 8(R)
darkswitching: 8d(R) → 8(R)

Technical characteristics:

Housing	Al-Cast
Weight Receiver:	approx. 600g
Transmitter:	approx. 700g
Protection mode	IP66
Supply	230VAC/3VA 24VDC/80mA without load
Output	Relay 250VAC/8A, 150W/1500VA ,1xCh , R pnp,antival.,open coll.,60mA Optocoupler, 60V/60mA
Switching mode	bright/dark changeable
Transmitter light	GaAs 880nm, invisible
Steady light resistance	>80kLx
Interference suppressor	Force synchronization
Access time	<12ms/Switch transition
Switching freqency	Relay: 10/s; electron.: 40/s
Switch indicator	LED's green (tr. & rec.)
Working indicator	LED red (transmitter)
Ambient temperatur	-25...+60°C

Special design:

Connection	Plug connection betw. T & R: 3+1 pin plug stE4 4+1 pin plug stA5 6+1 pin plug stA7
Supply	24-80VDC 110-130V, 42-48V, 24VAC
Access time	"q": <2ms/Switch transition
Switching freqency	"q": 300/s, Relay: 10/s
Time delay	0-10s, switching-on-off-delay, separately adjustable, z10
Level indicator	DIANA, i

Heat-protected transductor system, pl
Teleobjectives, t
If cooling water flange is used, the rear wall must be plain milled, y

Accessories:

Adjustment flange JF26Hq (1)
Cooling water flange KW26
Diaphragms
Optical filters
Anti dust tube TUB46
Furnace window O2004

Note:

The PG-Dummy-Screw joint marked by "*" , give sight to the photo-diode, when opened , so that transmitter and receiver can be adjusted to each other according to the light-beam -method (described on extra-sheet)

1623 DE
E_ 1623 1
(15.12.89 kg)
(02.09.98 tb)
10.06.02 tb

The design and make of the devices and their electronics are intellectual property of the company "Fotoelektrik Pauly GmbH & Co. KG". Internal circuit diagrams can, for copyright reasons, not be given therefore. Subject to technical alterations. Errors excepted. The reprinting of this data sheet or the copying of extracts from it are allowed only with the approval of the "Fotoelektrik Pauly GmbH & Co. KG" and with an indication of the sources used. Infringements are punishable by law.